Perimeter, area and volume

MyMaths

Question 1

a Work out the area and perimeter of shapes A, B and C.

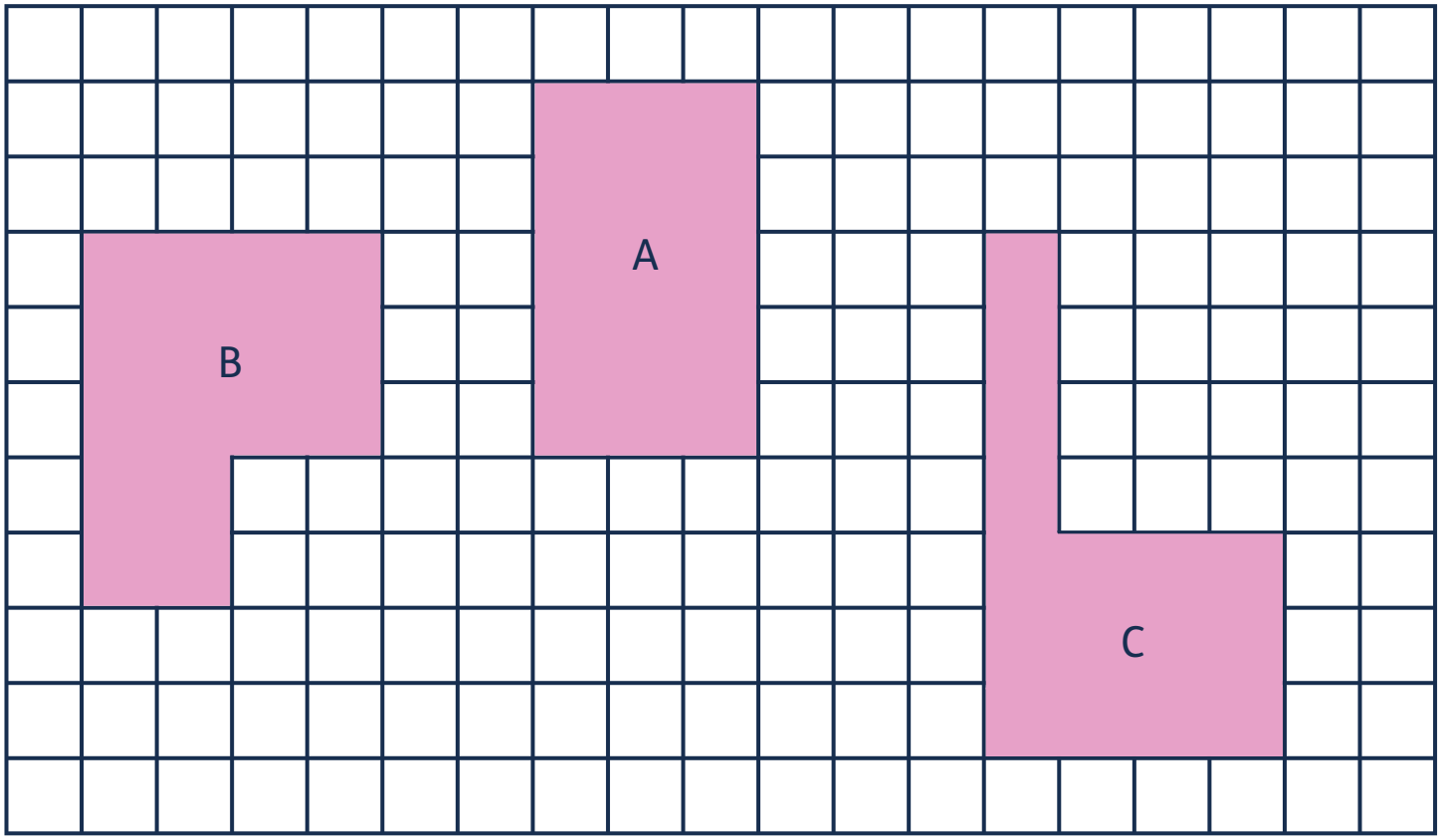

$\square$ = 1 cm^2

Shape	Perimeter	Area
A		
B		
C		

b In the space on the grid, draw a shape where the perimeter and area are the same. What is the perimeter and area of your new shape?

For further practice, log in to www.mymaths.co.uk
to access our WR Summer term booster pack

OXFORD

Perimeter, area and volume

Question 2

Can you find the missing length (x) in shape A?

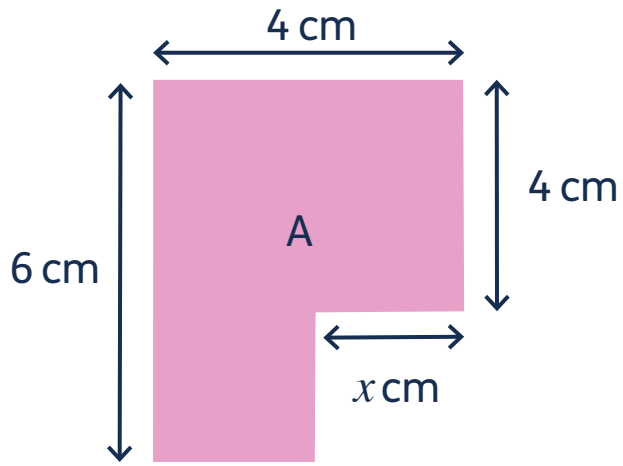

Area = 20 cm^2

Question 3

Find the areas of these shapes

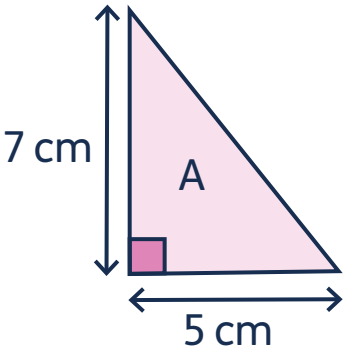

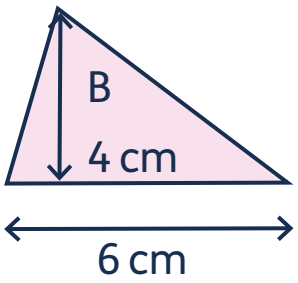

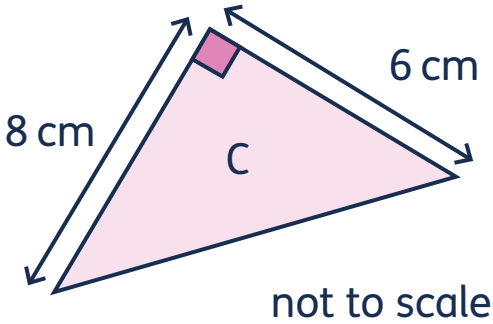

not to scale

Shape	Area
A	
B	
C	

For further practice, log in to www.mymaths.co.uk
to access our WR Summer term booster pack

Perimeter, area and volume

MyMaths

Question 4

Can you find the missing lengths?

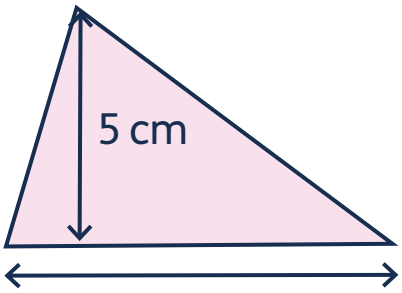

Area = 15 cm^2

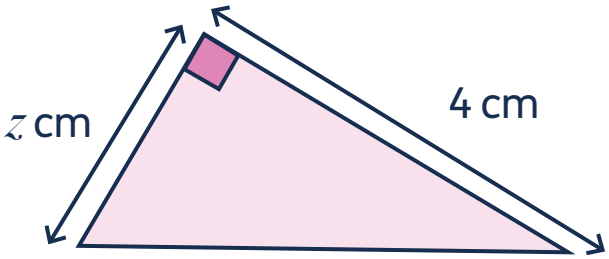

Area = 9 cm^2

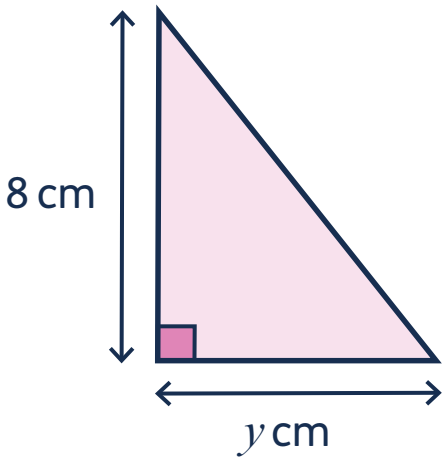

not to scale

Area = 24 cm^2

Side	Length
x	
y	
z	

For further practice, log in to www.mymaths.co.uk
to access our WR Summer term booster pack

OXFORD

Perimeter, area and volume

MyMaths

Question 5

What are the areas of these parallelograms?

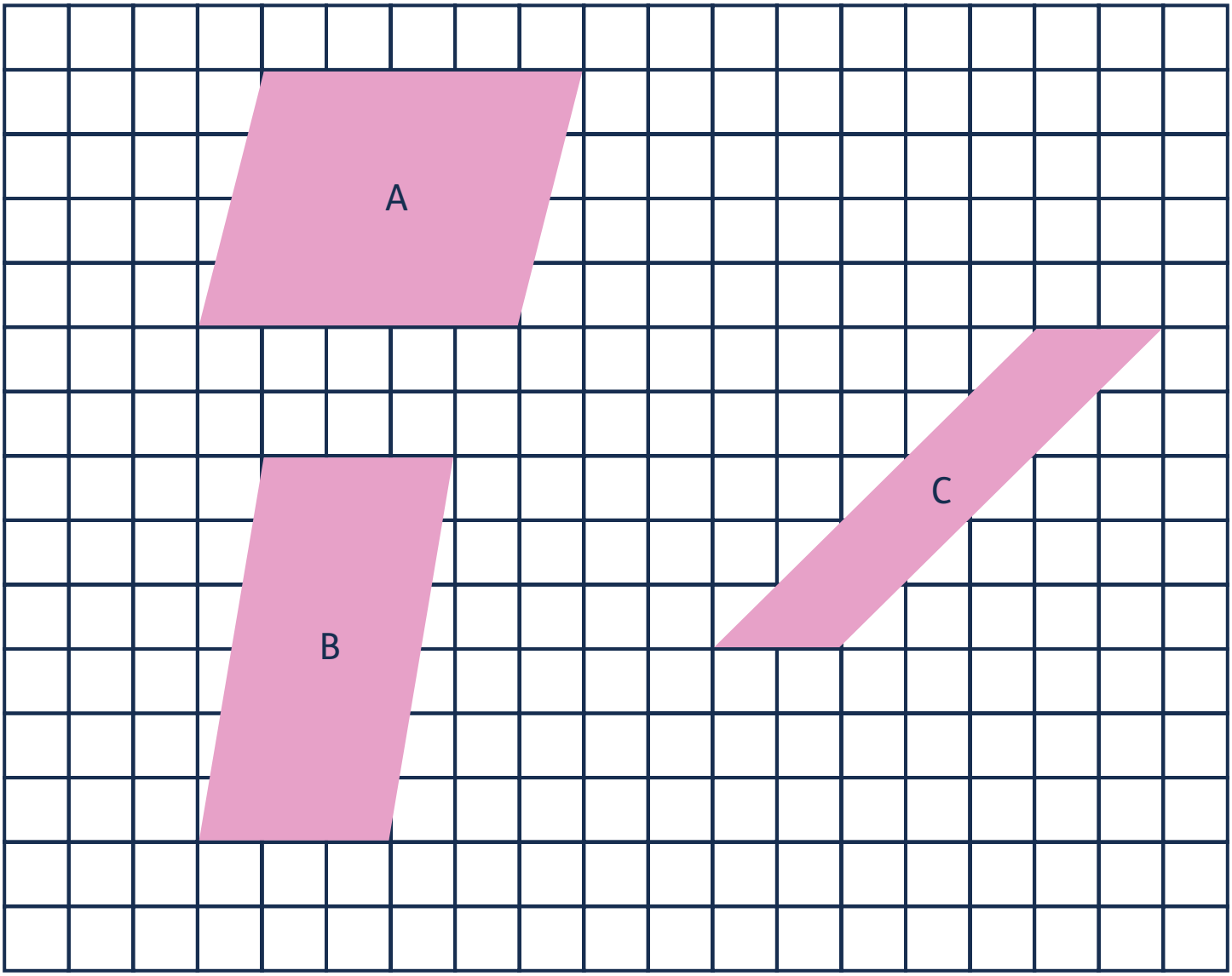

= 1 cm^2

Shape	Area
A	
B	
C	

For further practice, log in to www.mymaths.co.uk
to access our WR Summer term booster pack

OXFORD

Perimeter, area and volume

MyMaths

Question 6

a Find the areas of shapes A – F.

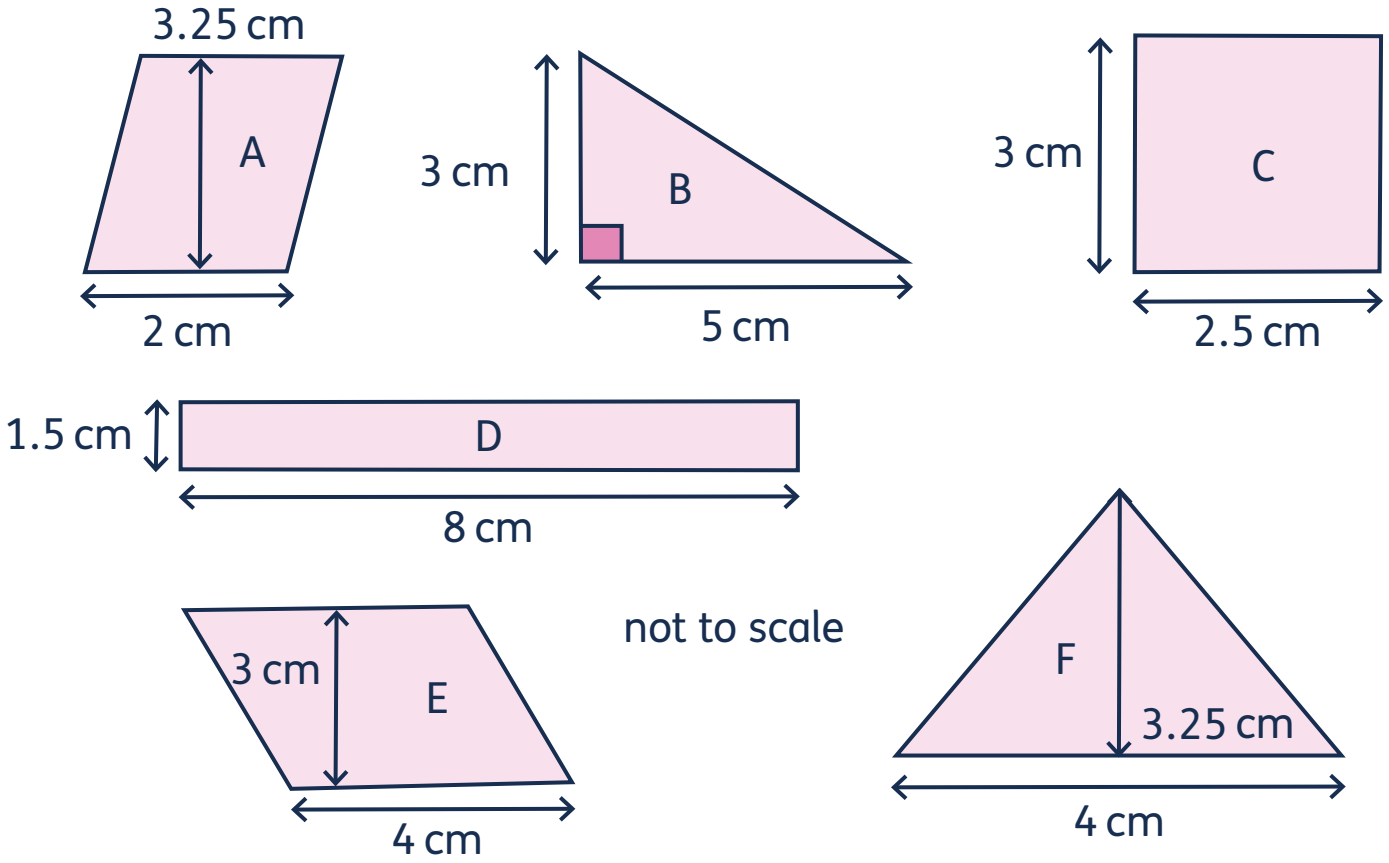

Shape	Area
A	
B	
C	
D	
E	
F	

b Which shapes have the same area?

For further practice, log in to www.mymaths.co.uk
to access our WR Summer term booster pack

OXFORD

Perimeter, area and volume

MyMaths

Question 7

Calculate the volume of these cuboids.

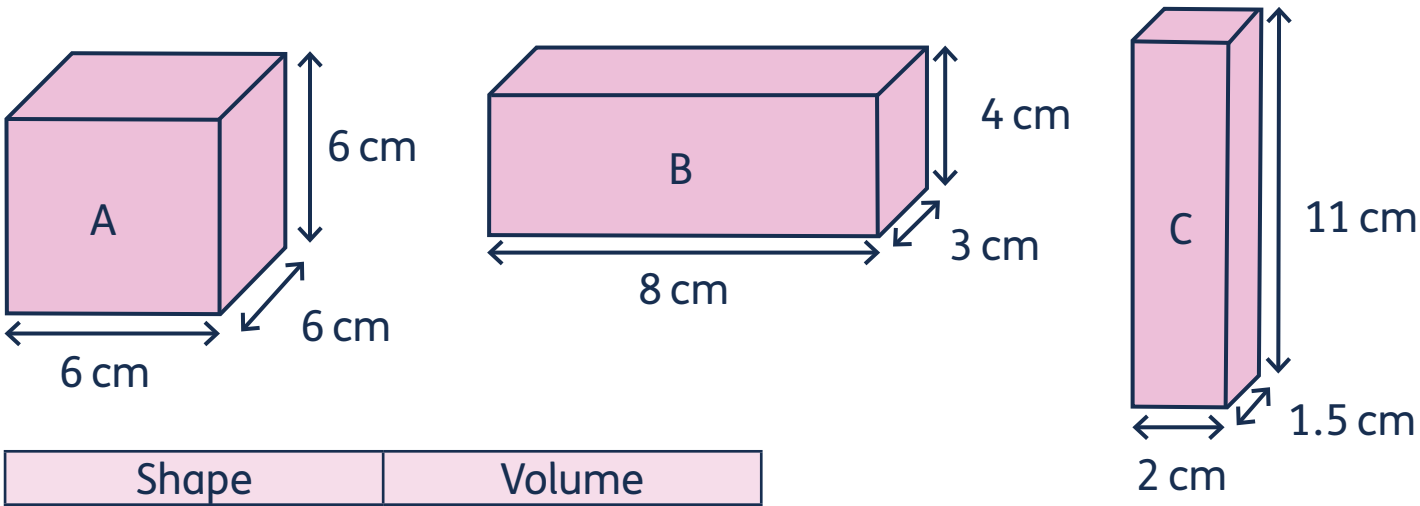

Shape	Volume
A	
B	
C	

Question 8

What is the volume of a cube which has side lengths of

a 5 m?

b 3 mm?

c 2 km?

For further practice, log in to www.mymaths.co.uk
to access our WR Summer term booster pack

OXFORD

Perimeter, area and volume

MyMaths

Question 9

a

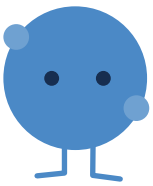

How many cubes of 1 cm^3 could you fit in a 1 m^3 cube?

b

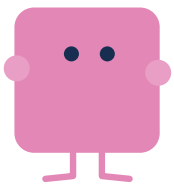

One face of a cuboid has an area of 10 mm^2. Its total volume is 30 mm^3. Give two different sets of dimensions for the cuboid.

For further practice, log in to www.mymaths.co.uk
to access our WR Summer term booster pack

OXFORD